Broîl Kîng®

Broîl Kîng®
495055
495055UK
495055GB
495055CH
495055EU
495055GBC

Broîl Kîng®
496055
496055UK
496055GB
496055CH
496055EU
496055GBC

Onward Manufacturing Company Limited
Since 1906
585 Kumpf Drive
Waterloo, Ontario, Canada
N2V 1K3

11412311 REV.C 08/2022

HARDWARE INCLUDED

Y-12859S	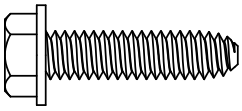	X16	G01CH038		X2
Y-12865S	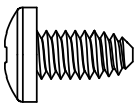	X12	Y-11560S	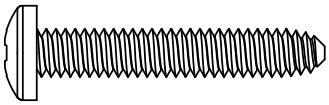	X2
49302-26	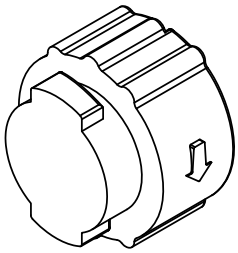	X1	Y-11698S	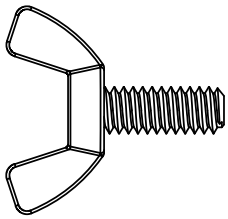	X2
63599-73	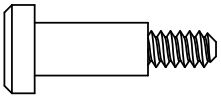	X2	S21061	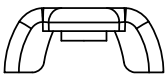	X2
Y-29304S	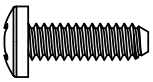	X4	C03010	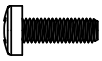	X2

TOOLS REQUIRED

#3 PHILLIPS

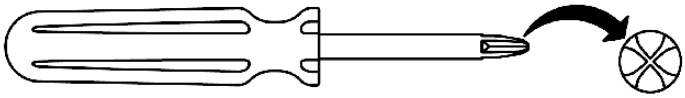

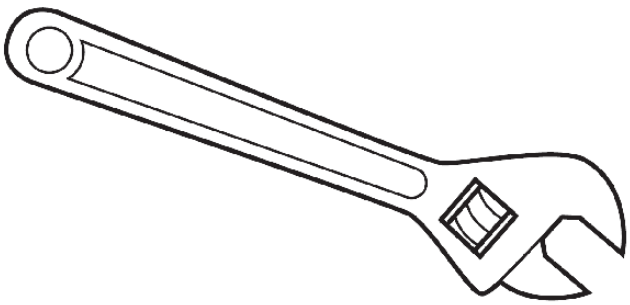

1	**(12)** 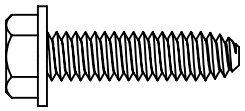

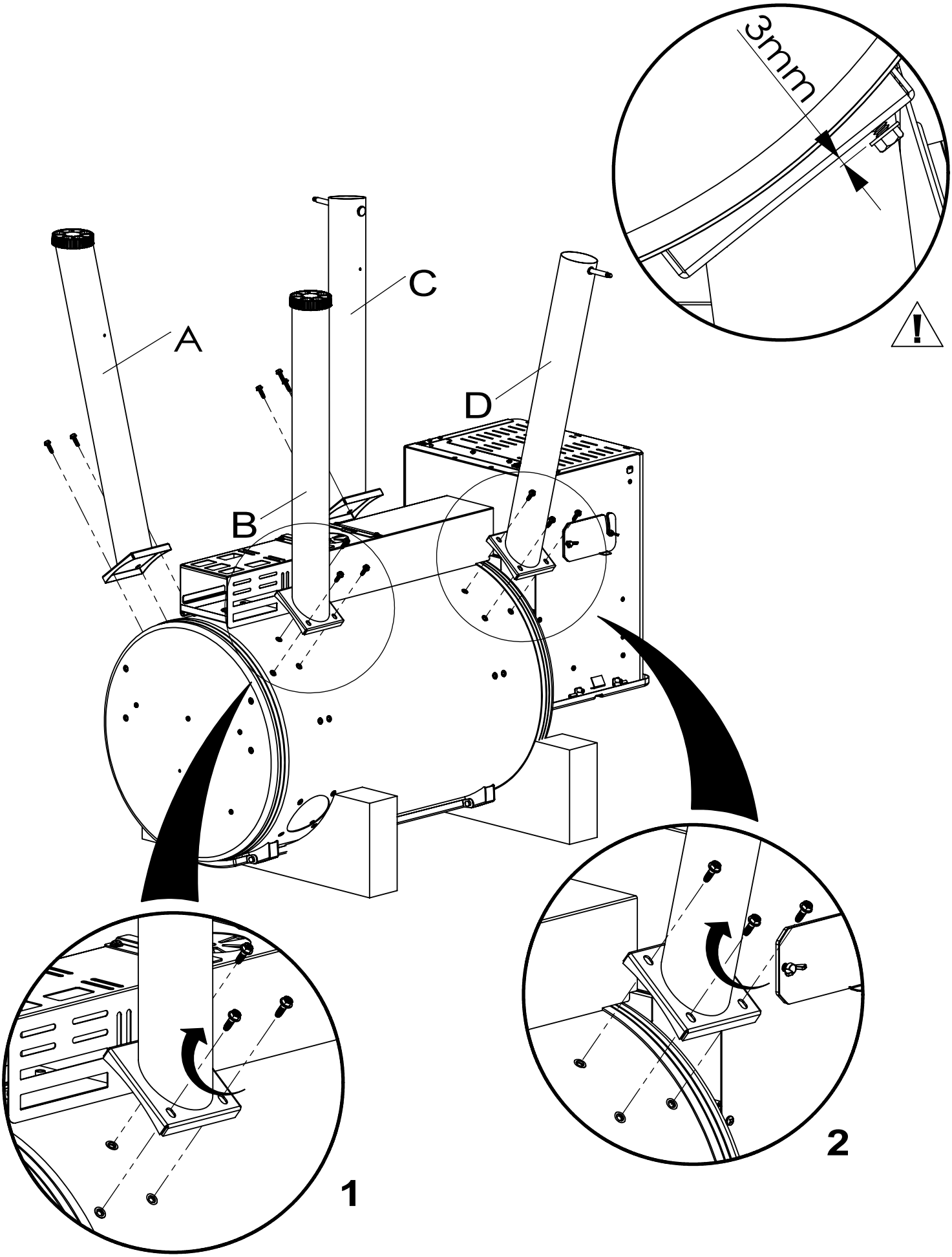

2	**(4)** 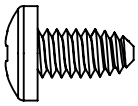 **(2)** 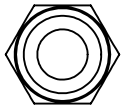

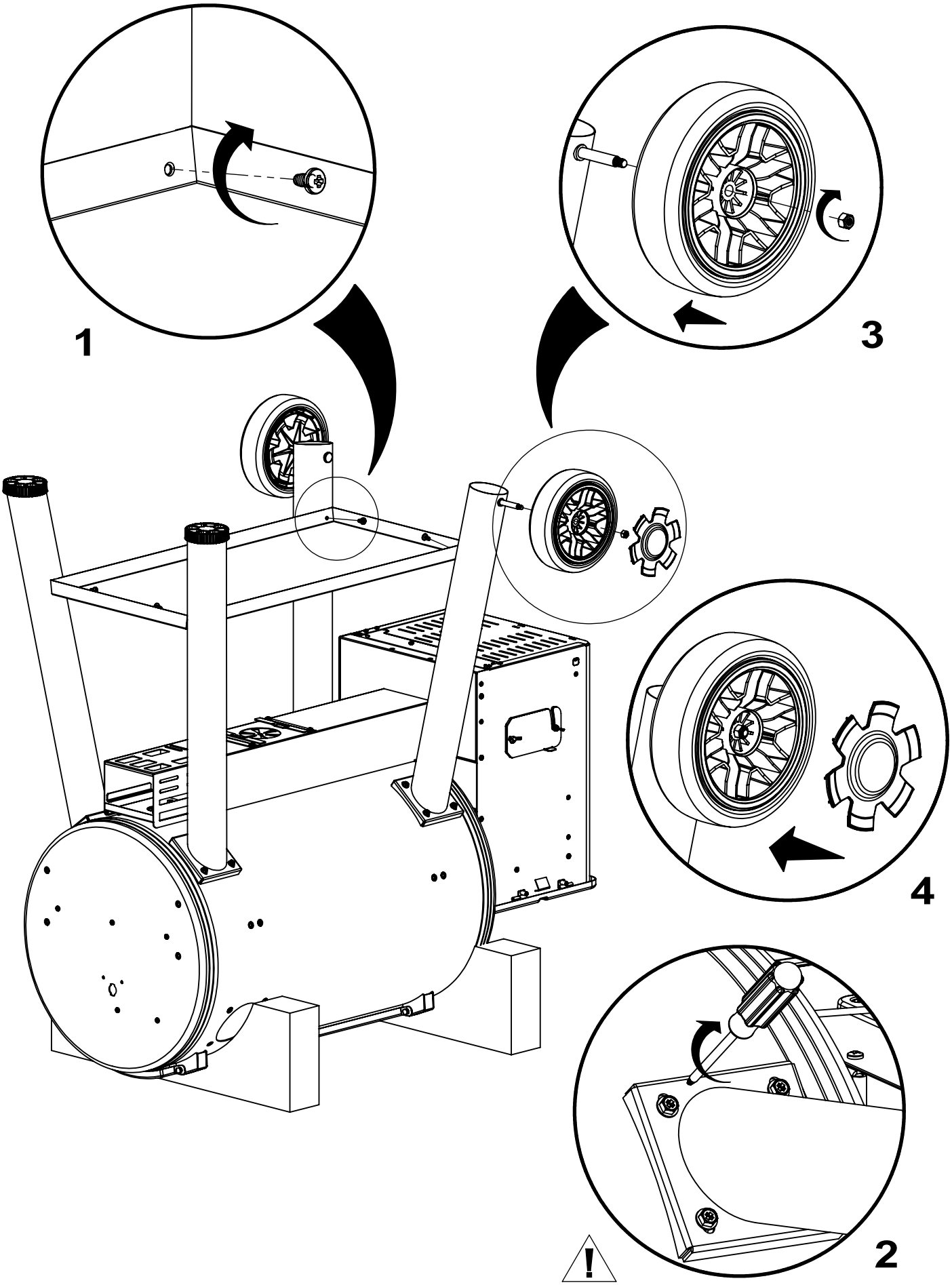

3	**(2)**

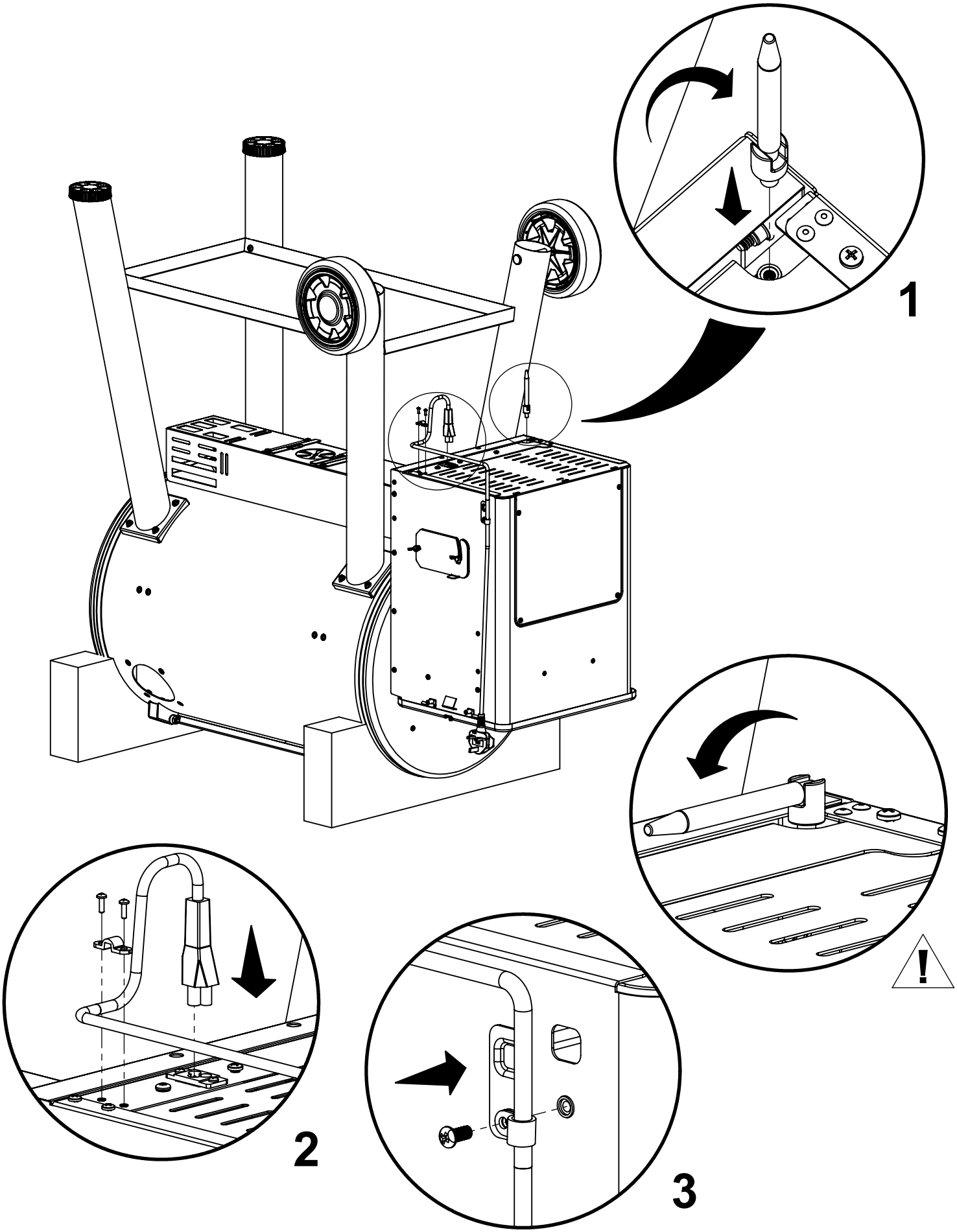

4	

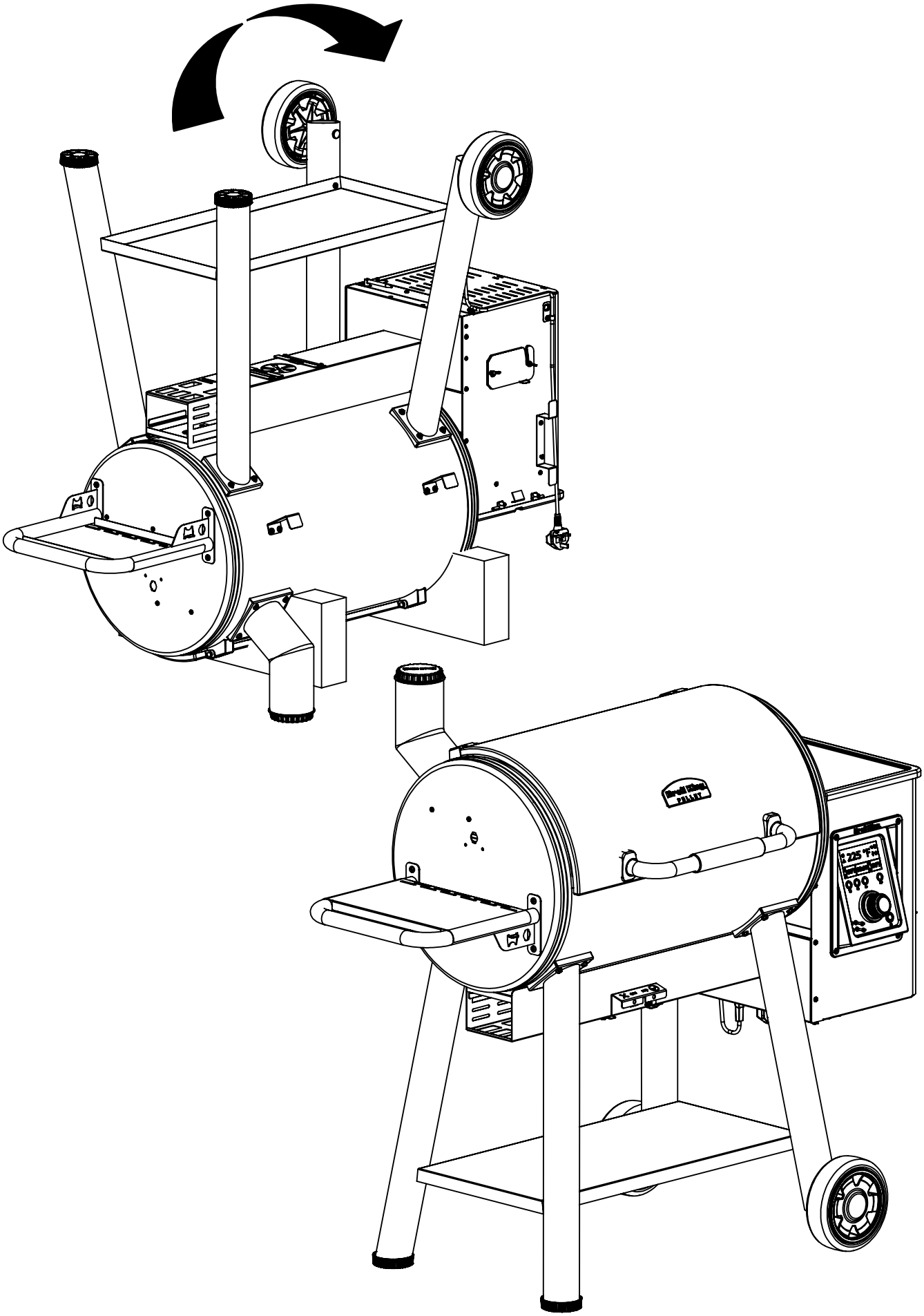

5	**(2)** 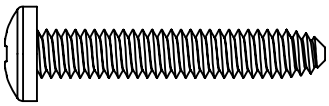

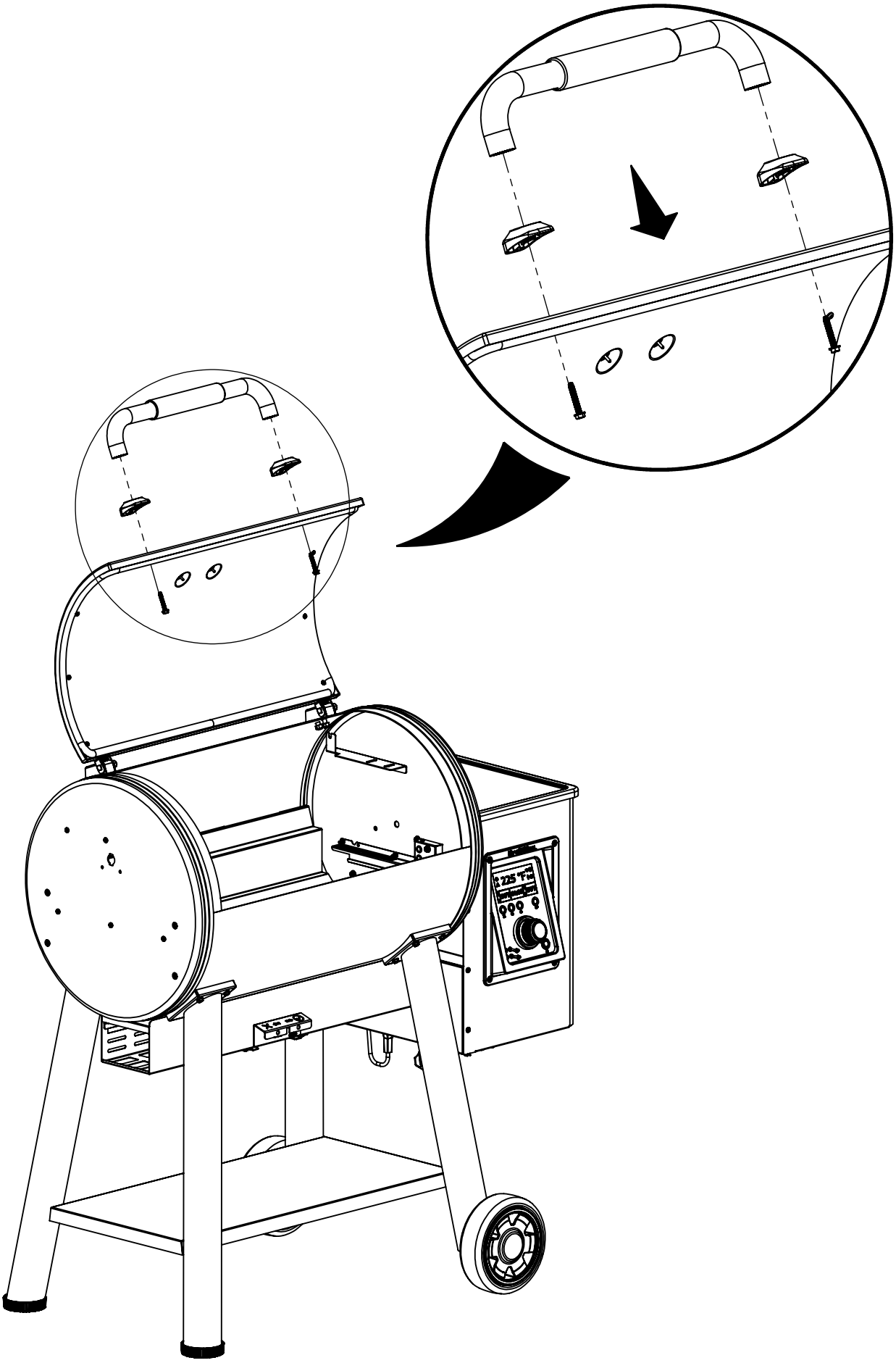

6	**(4)** 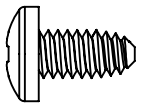

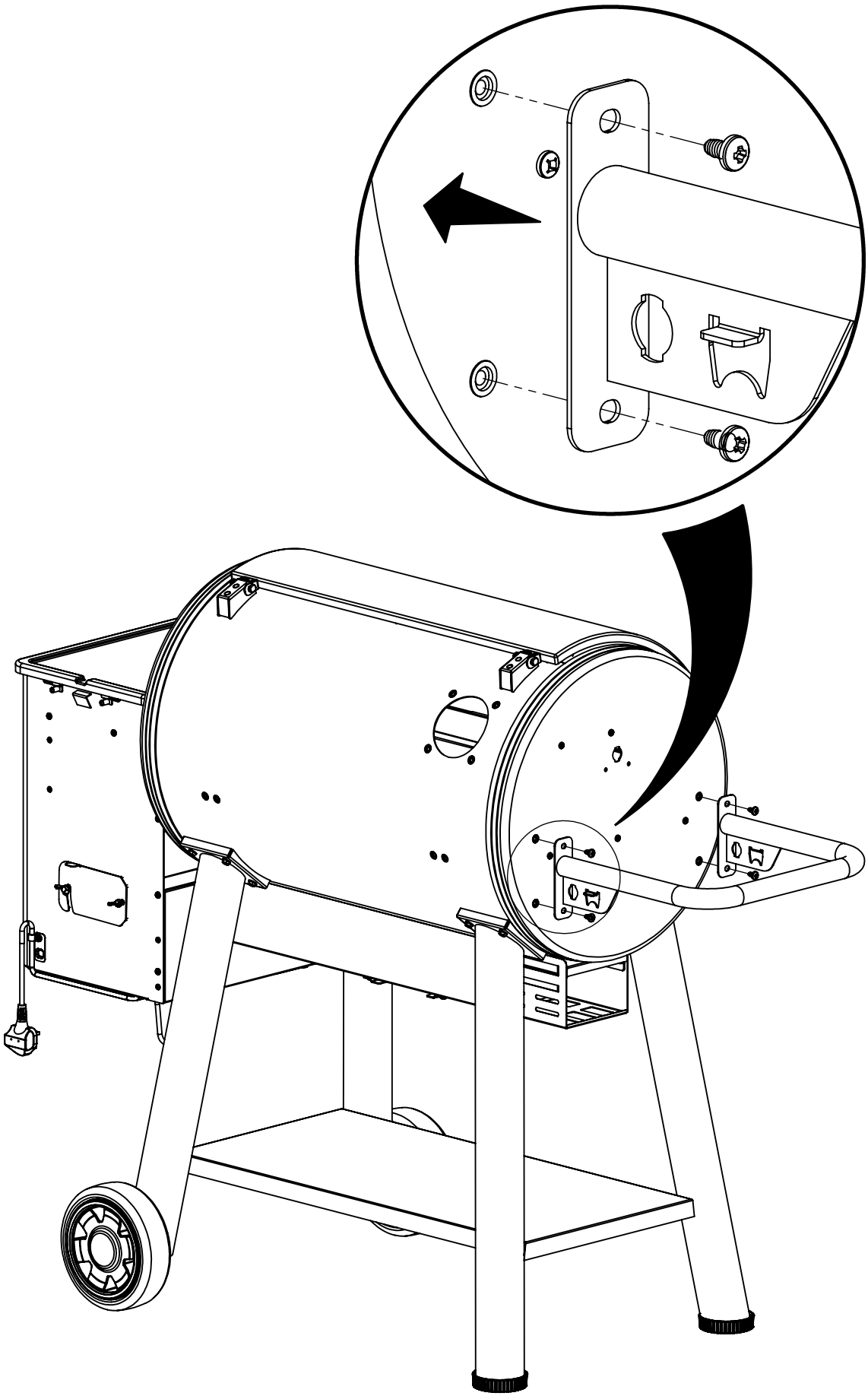

7	**(2)** 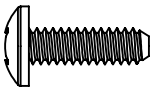 **(1)** 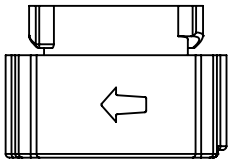

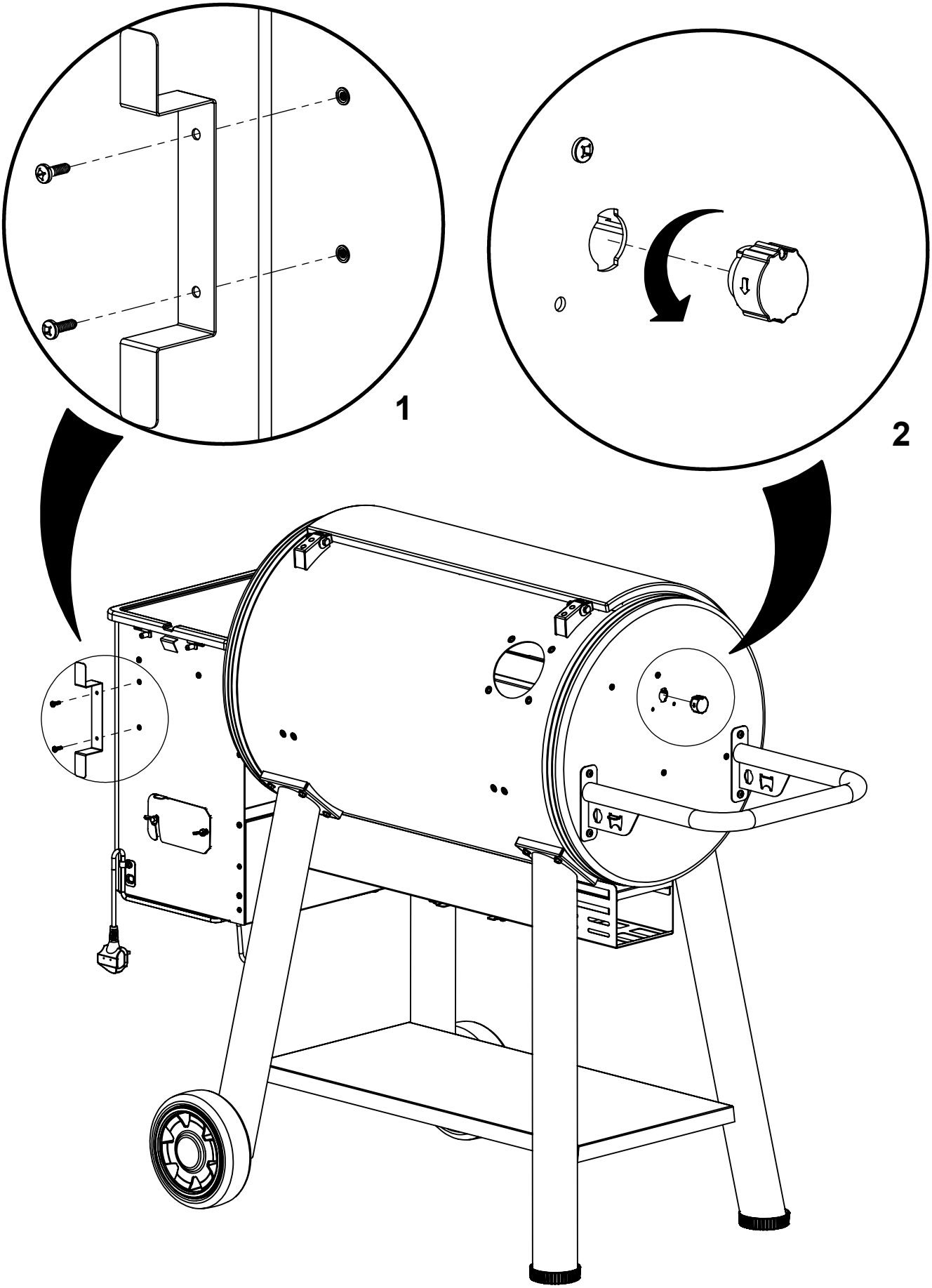

8	

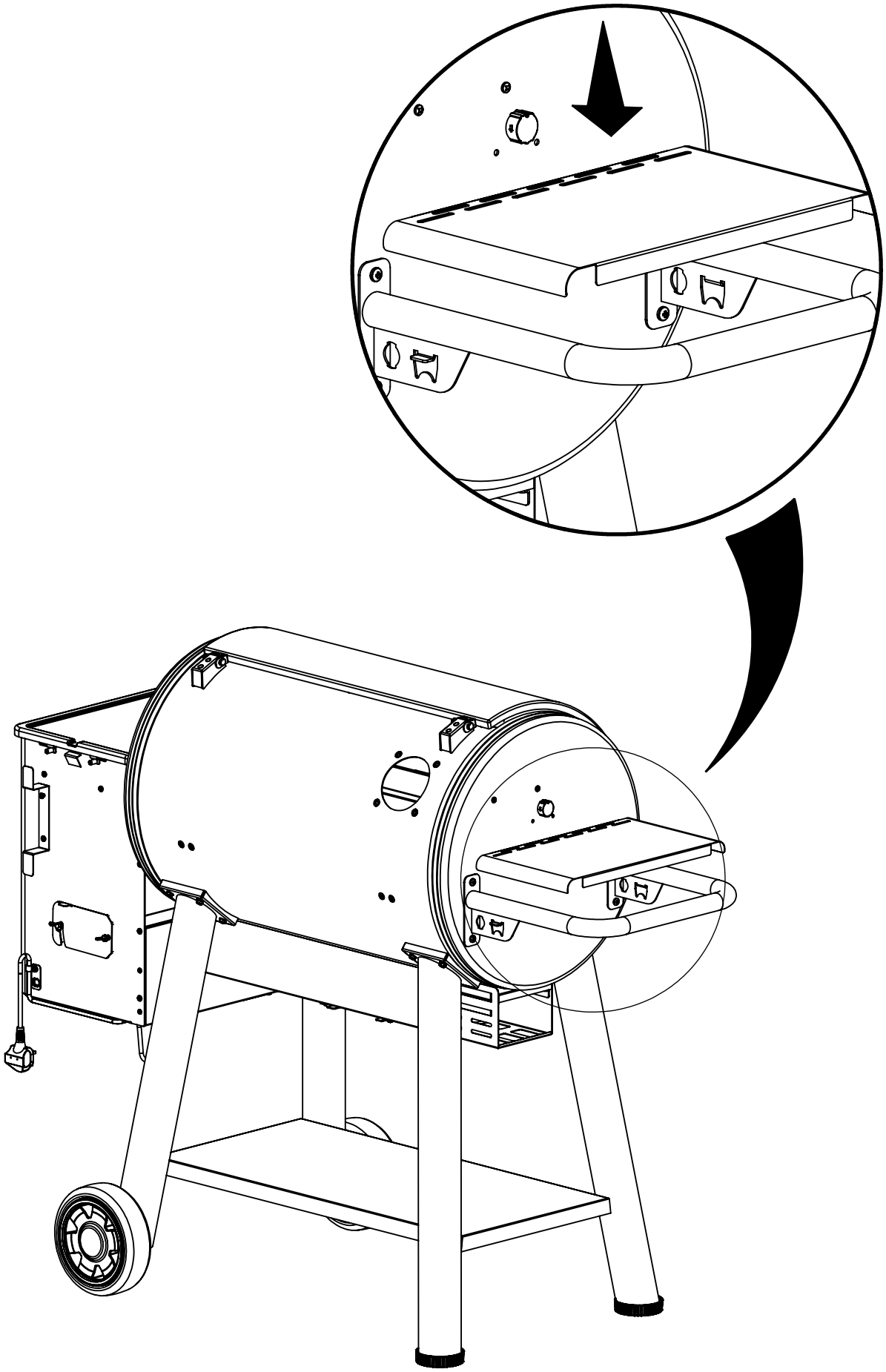

9	**(4)** 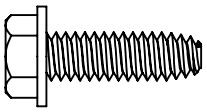

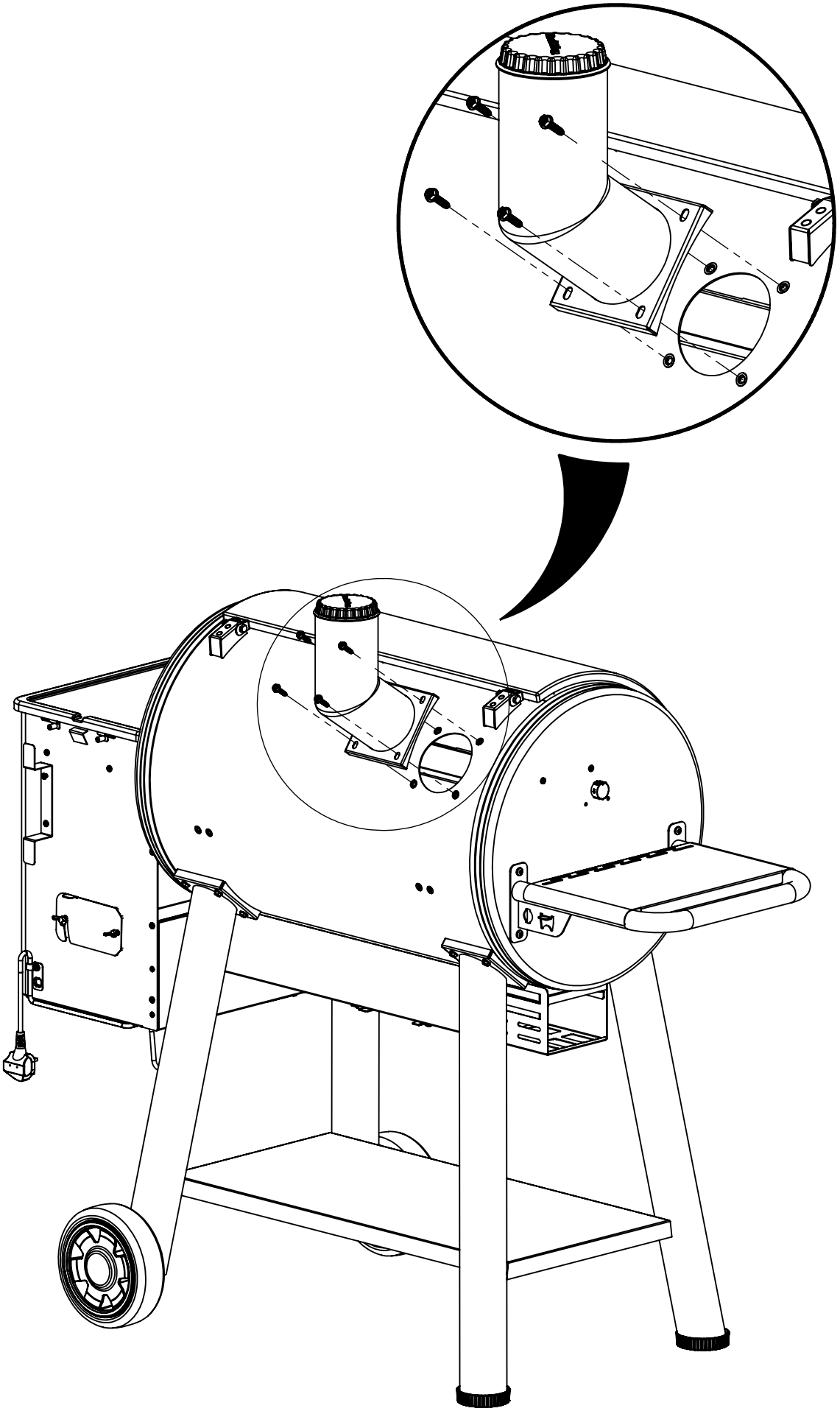

10	**(4)** 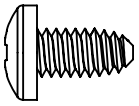

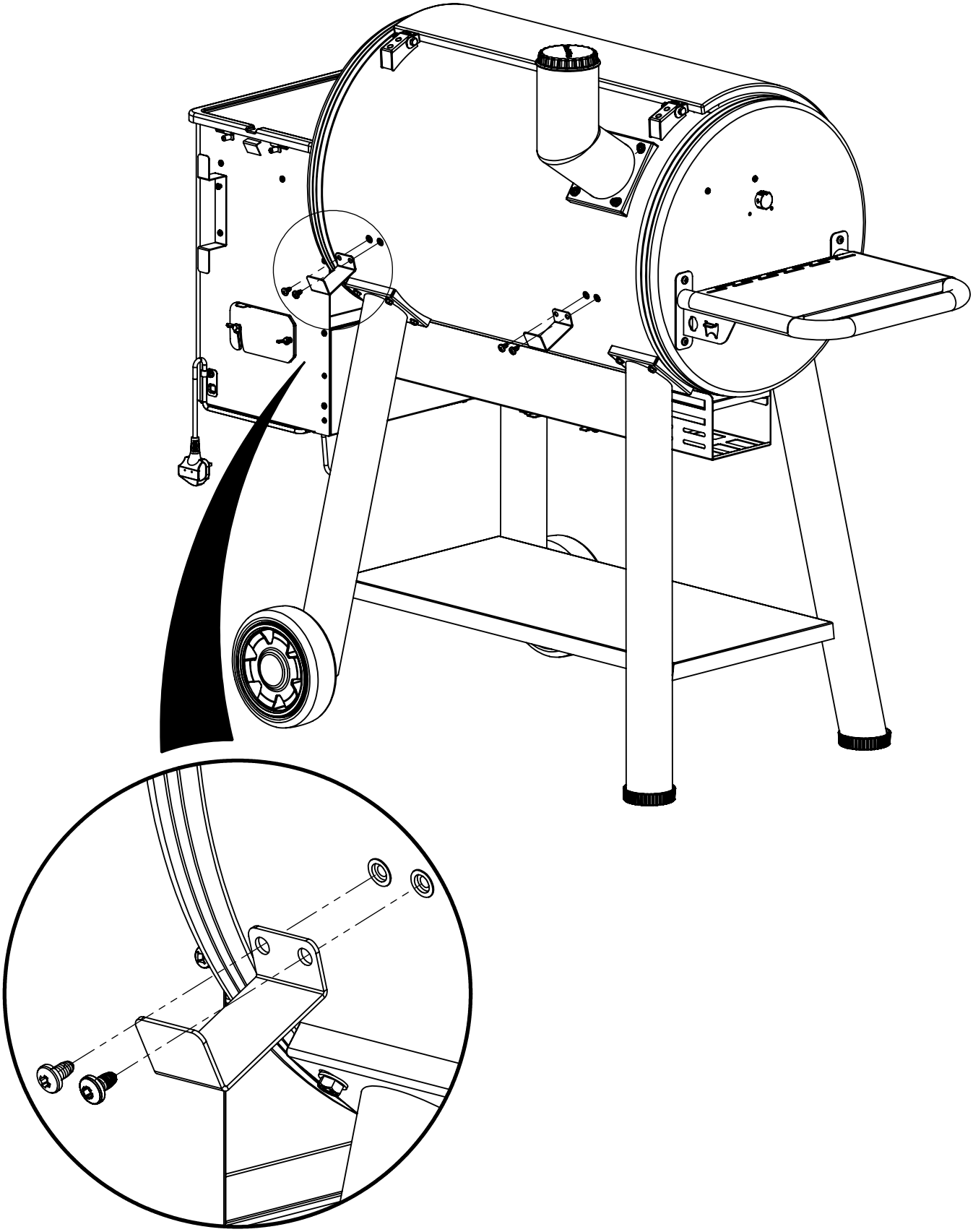

11	**(2)** 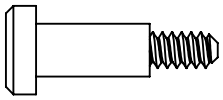

12	

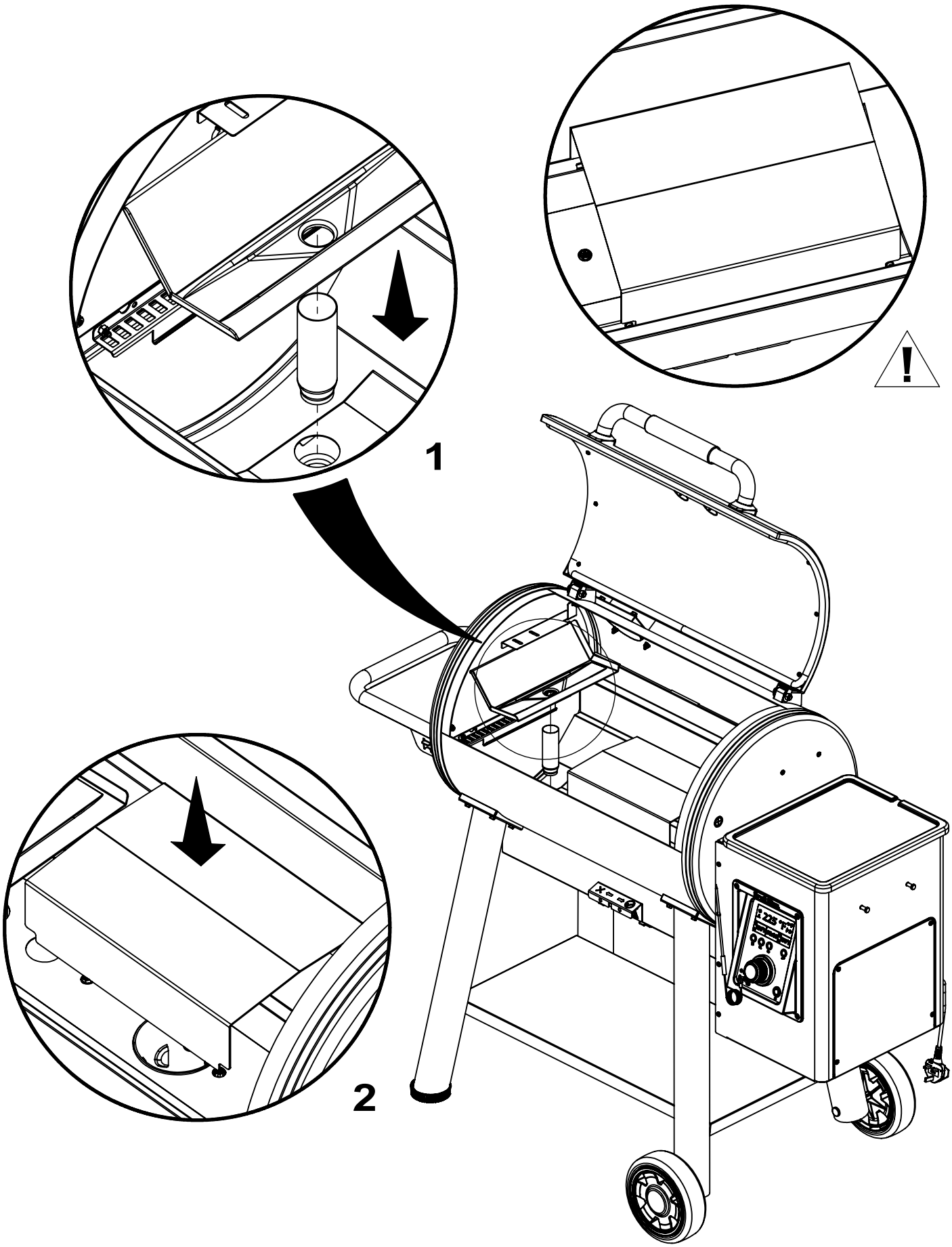

13	

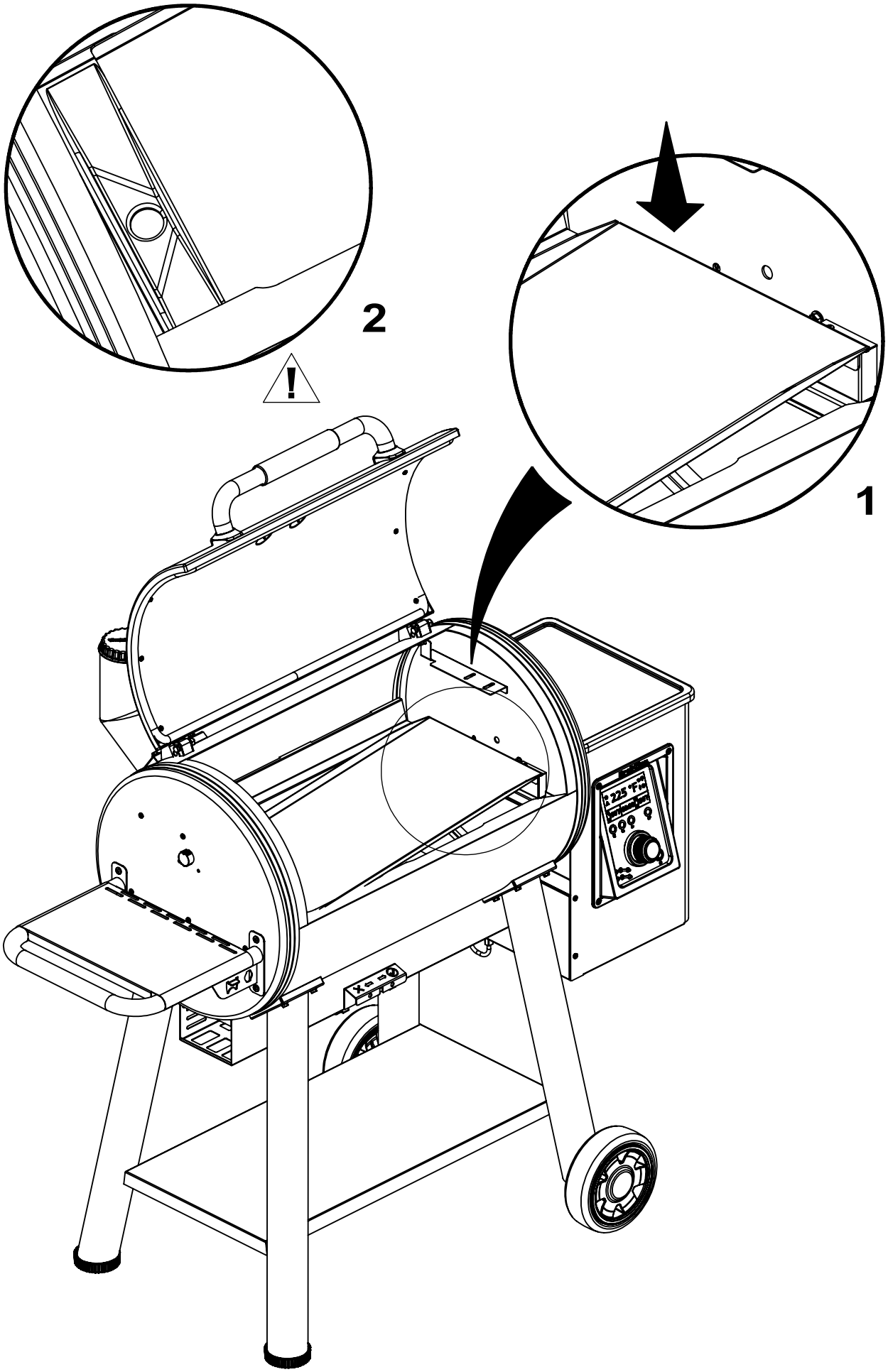

14	

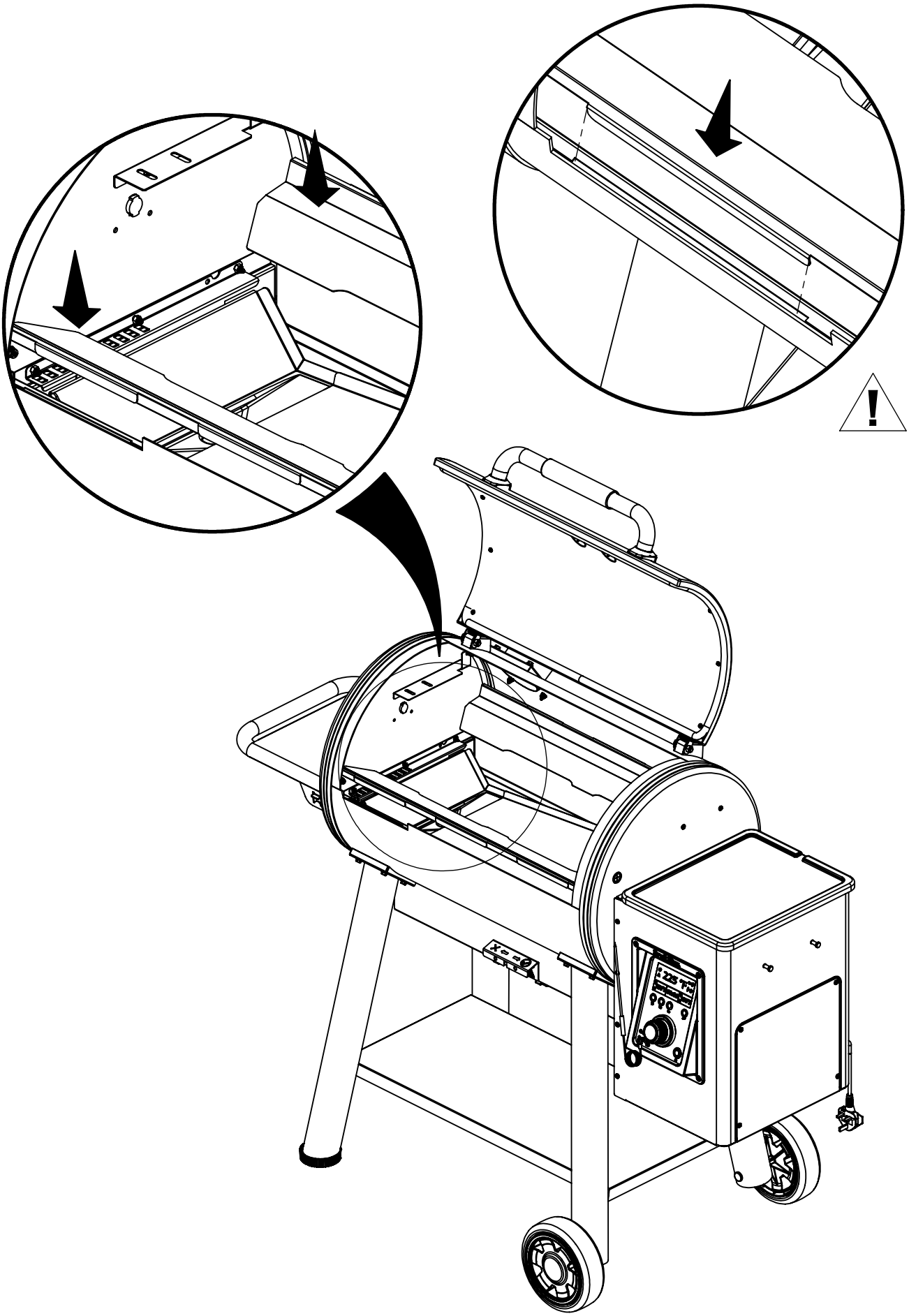

15	

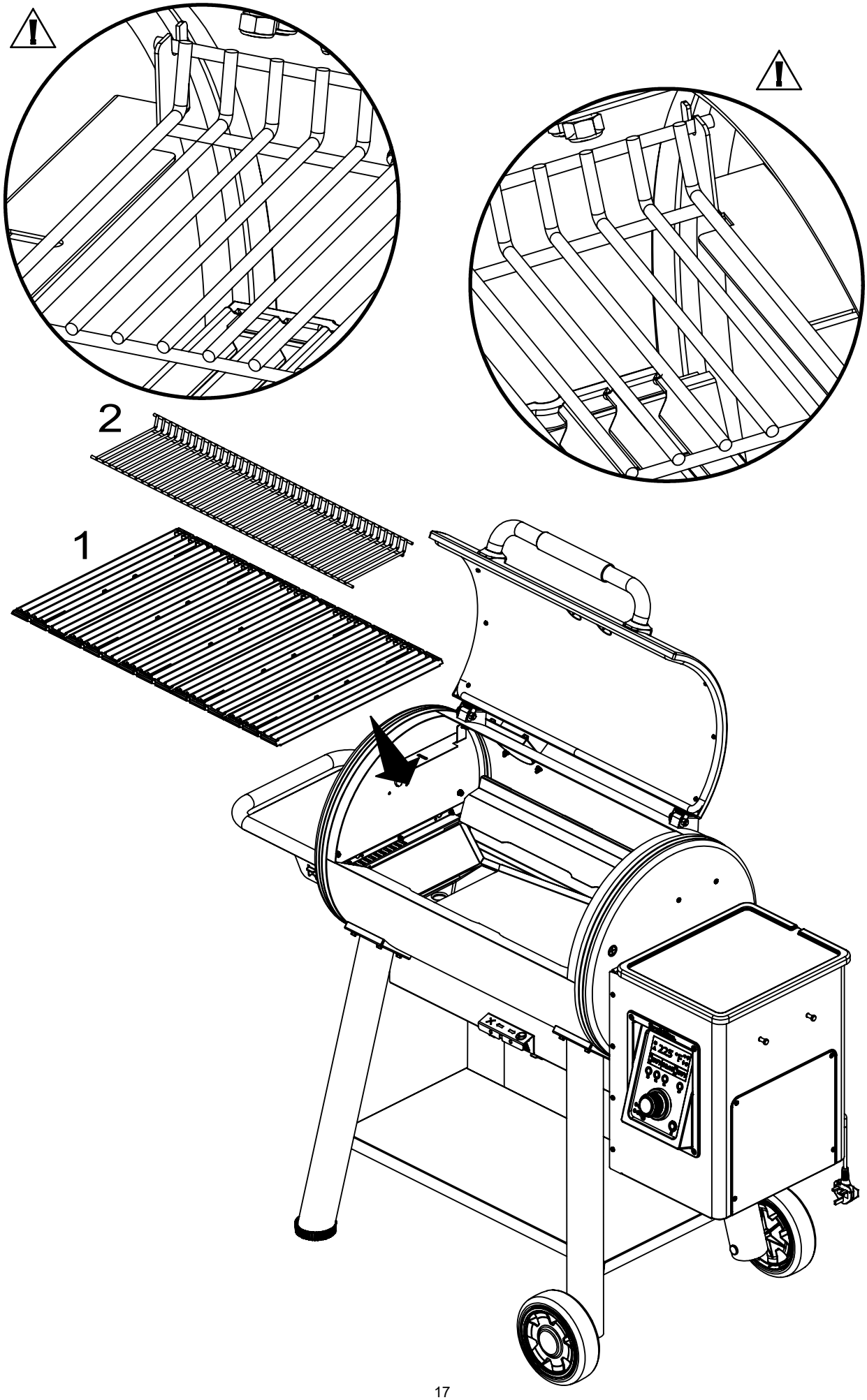

16	

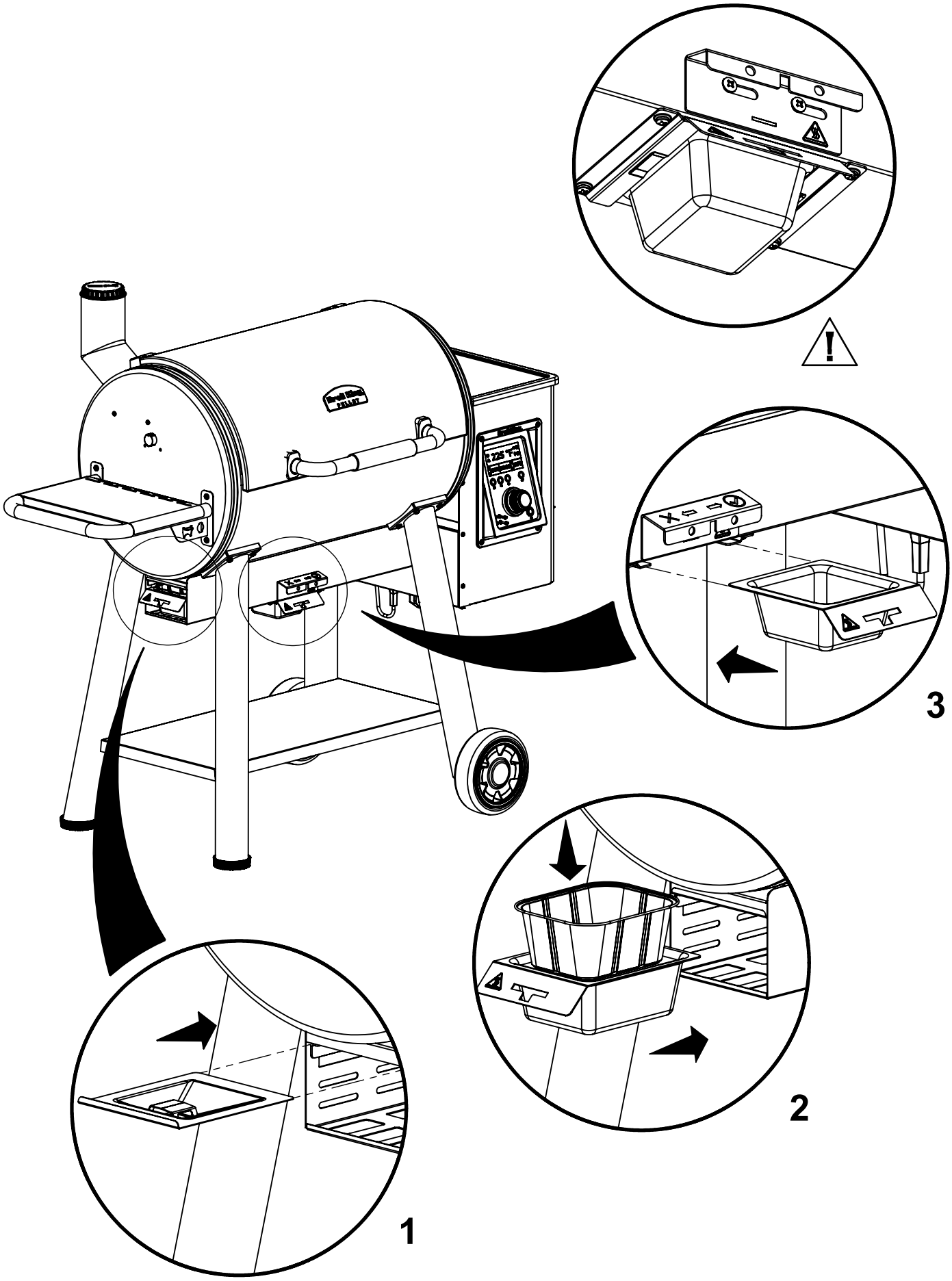

17	

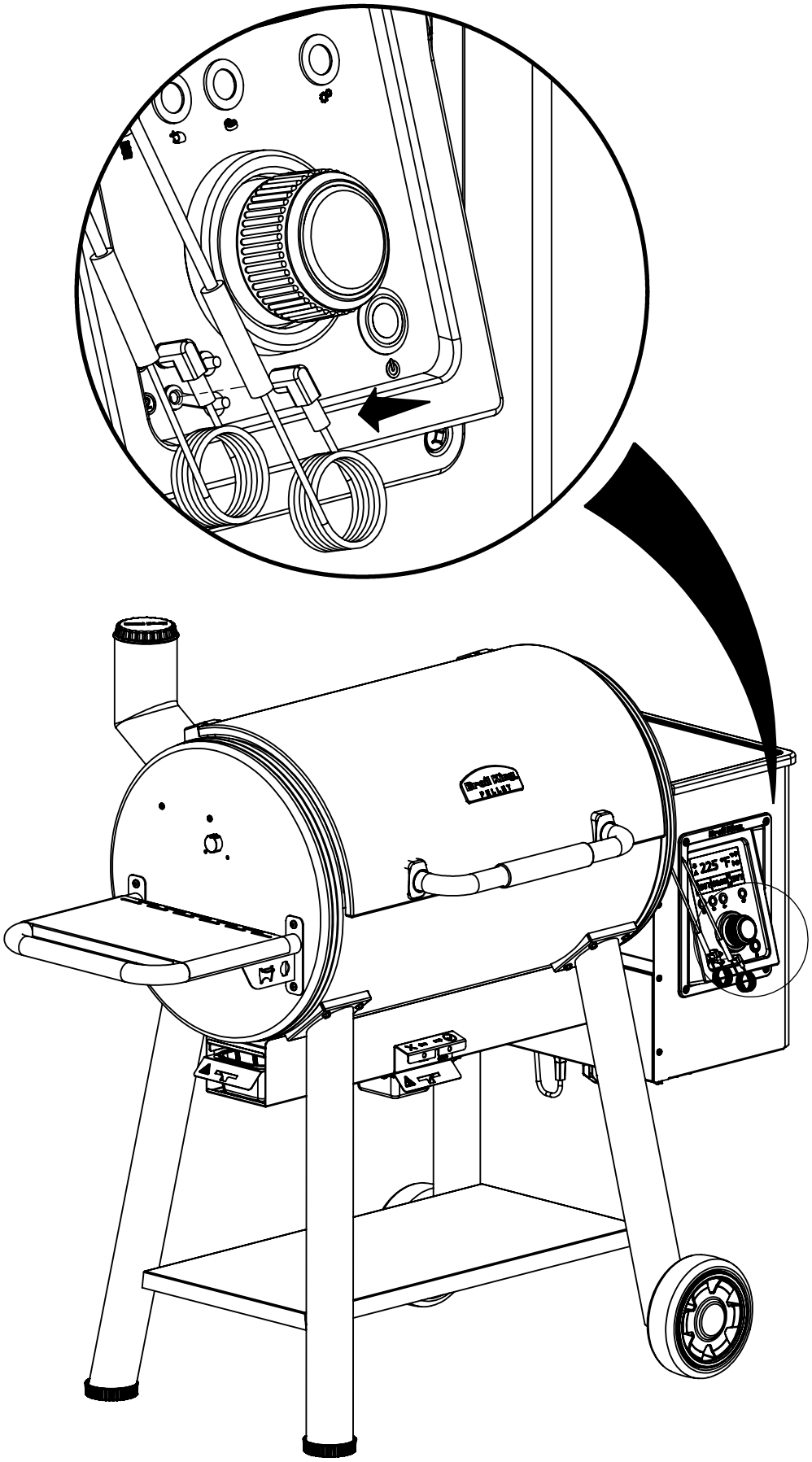

18	**(2)** 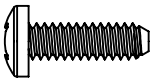 **(2)** 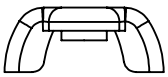 **(2)** 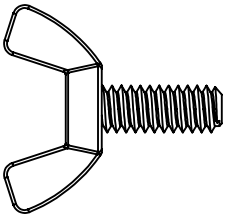

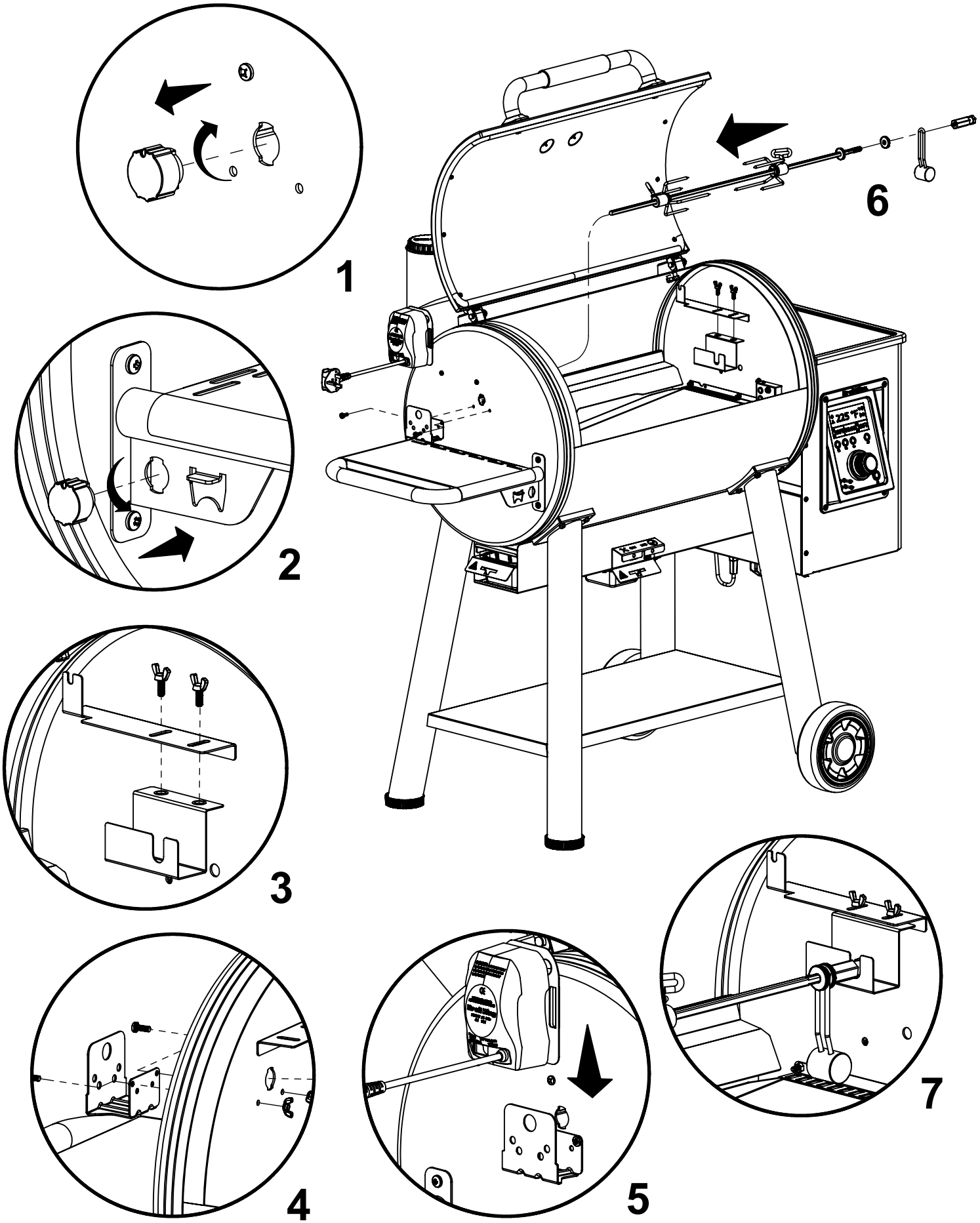

KEY#	ITEM#	DESCRIPTION (ENGLISH)	495055 495055EU	496055 496055EU	495055CH	496055CH	495055UK 495055GB 495055GBC	496055UK 496055GB 496055GBC
1	49302-13A	LID-WELDED ASSEMBLY-PELLET 625	-	1	-	1	-	1
	49305-13A	LID-WELDED ASSEMBLY-PELLET 500	1	-	1	-	1	-
2	44599-30BK	NAMEPLATE - PELLET	1	1	1	1	1	1
3	54009-94	HANDLE SEAT	2	2	2	2	2	2
4	24003-13A	HANDLE-LID ASSEMBLY	1	1	1	1	1	1
5	45304-90A	GASKET-LID-PELLET 625	-	1	-	1	-	1
	45306-90A	GASKET-LID-PELLET 500	1	-	1	-	1	-
6	49005-99	GRID-WARMING RACK-PELLET 625	-	1	-	1	-	1
	49004-99	GRID-WARMING RACK-PELLET 500	1	-	1	-	1	-
7	22005-281	CAST COOKING GRID	4	5	4	5	4	5
8	45305-25	GUIDE PLATE-PELLET 625	-	2	-	2	-	2
	45304-25	GUIDE PLATE-PELLET 500	2	-	2	-	2	-
9	45305-85	HEAT SHIELD-PELLET 625	1	1	1	1	1	1
10	45305-78A	GREASE TRAY-WELDED ASSEMBLY	1	1	1	1	1	1
11	45305-77	GREASE TRAY-PELLET 625	-	1	-	1	-	1
	45304-77	GREASE TRAY-PELLET 500	1	-	1	-	1	-
12	45304-23	SHIELD-RADIATION-PELLET	1	1	1	1	1	1
13	49302-32A	CHIMNEY-WELDED ASSEMBLY	1	1	1	1	1	1
14	44599-40A	DAMPER CAP ASSEMBLY	1	1	1	1	1	1
15	46303-67A	DAMPER-BURNPOT	1	1	1	1	1	1
16	45304-11	SUPPORT-BURNPOT	1	1	1	1	1	1
17	45303-10A	BURNPOT-WELDED ASSEMBLY	1	1	1	1	1	1
18	66440-99	HOT ROD-PELLET(CE)	1	1	1	1	1	1
19	49302-00A	FIREBOX-WELDED ASSEMBLY-PELLET 625	-	1	-	1	-	1
	49305-00A	FIREBOX-WELDED ASSEMBLY-PELLET 500	1	-	1	-	1	-
20	65303-12	PROBE-PELLET(PT1000)	1	1	1	1	1	1
21	45305-93	INNER HEAT SHIELD	1	1	1	1	1	1
22	49303-14	PROBE BOX	1	-	1	-	1	-
23	45303-80	HANDLE-WELDED ASSEMBLY-PELLET	1	1	1	1	1	1
24	45305-84	BRACKET-ROTISSERIE	2	2	2	2	2	2
25	45303-61	SHELF-SIDE-PELLET	1	1	1	1	1	1
26	49302-26	CAP-ROTISSERIE	1	1	1	1	1	1
27	49302-23A	HINGE-ASSEMBLY	2	2	2	2	2	2
28	49303-16	BRACKET-WARMING RACK LH	1	1	1	1	1	1
29	49303-17	BRACKET-WARMING RACK RH	1	1	1	1	1	1
30	45305-74	BRACKET-GREASE TRAY	2	2	2	2	2	2
31	45305-79	GREASE TUBE	1	1	1	1	1	1
32	45303-04A	AUGER ENCLOSURE-WELDED ASSEMBLY-PELLET 625	-	1	-	1	-	1
	45306-04A	AUGER ENCLOSURE-WELDED ASSEMBLY-PELLET 500	1	-	1	-	1	-
33	45304-88	BASE-AGITATOR	1	1	1	1	1	1
34	45303-51A	AGITATOR-WELDED ASSEMBLY	1	1	1	1	1	1
35	49440-96	FAN-DC(12V)	1	1	1	1	1	1
36	49303-81A	SUPPOT-HOPPER-ASSEMBLY	1	1	1	1	1	1
37	49304-61	ASH TRAY	1	1	1	1	1	1
38	49303-53	BRACKET-ASH TRAY	2	2	2	2	2	2
39	45304-63A	COVER-GREASE TRAY-PELLET	1	1	1	1	1	1
40	50417	GREASE PAN-PELLET	3	3	3	3	3	3
41	49440-17	GREASE TRAY	1	1	1	1	1	1
42	49304-51	AUGER-PELLET 625	-	1	-	1	-	1
	49306-51	AUGER-PELLET 500	1	-	1	-	1	-
43	45306-53	COLLAR-AUGER MOTOR	1	1	1	1	1	1
44	45304-90	COLLAR-AUGER-PELLET	1	1	1	1	1	1
45	45303-76A	BRACKET-MOTOR	1	1	1	1	1	1
46	66440-91	AUGER MOTOR-PELLET(CE)	1	1	1	1	1	1
47	45304-28	BRACKET-WIRE-PELLET	1	1	1	1	1	1
48	45306-02-2	HINGE-HOPPER	8	8	8	8	8	8
49	49304-56A	FUEL DOOR-ASSEMBLY-PELLET	1	1	1	1	1	1
50	46625-92A	PANEL-HOPPER	1	1	1	1	1	1
51	66440-97	WIRE-POWER CORD(CE-UK)	-	-	-	-	1	1
	66441-97	WIRE-POWER CORD(CE-CH)	-	-	1	1	-	-
	66442-97	WIRE-POWER CORD(CE-EU)	1	1	-	-	-	-
52	66303-91	BLOCK-POWER CORD(CE)	1	1	1	1	1	1
53	49302-01A	LID-ASSEMBLY-HOPPER-PELLET	1	1	1	1	1	1
54	49303-26A	HOPPER-MESH LID ASSEMBLY-PELLET	1	1	1	1	1	1
55	49303-01A	HOPPER-WELDED ASSEMBLY	1	1	1	1	1	1
56	49440-86	SIDE DOOR-HOPPER 440	1	1	1	1	1	1
57	66603-89A	PCB CONTROLLER ASSEMBLY-PELLET 625(CE)	-	1	-	1	-	1
	66606-89A	PCB CONTROLLER ASSEMBLY-PELLET 500(CE)	1	-	1	-	1	-

KEY#	ITEM#	DESCRIPTION (ENGLISH)	495055 495055EU	496055 496055EU	495055CH	496055CH	495055UK 495055GB 495055GBC	496055UK 496055GB 496055GBC
58	22001-668C	CONTROL KNOB - SMALL	1	1	1	1	1	1
59	49301-6B	PROBE-TEMPERATURE B (PT1000)	1	1	1	1	1	1
60	45303-64	PROBE-TEMPERATURE (PT1000)	1	1	1	1	1	1
61	45303-45A	SINGAL RECEIVER	1	1	1	1	1	1
62	42302-30	LEG/WHEEL-WELDED ASSEMBLY(RR)	1	1	1	1	1	1
63	42302-40	LEG-WELDED ASSEMBLY(LR)	1	1	1	1	1	1
64	42302-20	LEG-WELDED ASSEMBLY(LF)	1	1	1	1	1	1
65	42302-10	LEG/WHEEL-WELDED ASSEMBLY(RF)	1	1	1	1	1	1
66	61302-41	BASE-PELLET 625	-	1	-	1	-	1
	61305-41	BASE-PELLET 500	1	-	1	-	1	-
67	41302-33	LEVELER-LEG	2	2	2	2	2	2
68	G01A0009	WHEEL	2	2	2	2	2	2
69	G01CP009	CAP-WHEEL	2	2	2	2	2	2
70	60745	STEEL GRID LIFTER	1	1	1	1	1	1
71	Y-11560S	SCREW 1/4-20X1.5"	5	5	5	5	5	5
72	Y-12859S	SCREW 1/4-20X1"	12	12	12	12	12	12
73	44304-72	PANEL-LID INNER 625	-	1	-	1	-	1
	44306-72	PANEL-LID INNER 500	1	-	1	-	1	-
74	Y-12865S	SCREW 1/4-20X0.5"	14	14	14	14	14	14
75	Y-29304S	SCREW #10-24X0.375"	10	10	10	10	10	10
76	49302-24	HINGE-LID	2	2	2	2	2	2
77	C01014	SCREW M4X10	3	3	3	3	3	3
78	Y-11805	NUT-HEX #10-24	10	10	10	10	10	10
79	60240-13	HINGE-LID	2	2	2	2	2	2
80	Y-15008S	NUT-LOCKING M8x1.25	6	6	6	6	6	6
81	63599-73C	SCREW-SHOULDER #10-24	2	2	2	2	2	2
82	C01015	SCREW-GROUND M5X16	1	1	1	1	1	1
83	G01CH038	NUT-LOCKING M8x1.25	2	2	2	2	2	2
84	Y-29304S	SCREW #10-24X0.375"	21	21	21	21	21	21
85	Y-29324	SCREW #10-24x1.5"	4	4	4	4	4	4
86	63599-78	SCREW-SHOULDER #10-24	2	2	2	2	2	2
87	C05010	SCREW M5X10	2	2	2	2	2	2
88	C01025	SCREW M5X35	4	4	4	4	4	4
89	C11005	SPRING WASHER φ5	1	1	1	1	1	1
90	Y-11698S	SCREW-BUTTERFLY 1/4"-20X0.625"	2	2	2	2	2	2
91	C04210S	SCREW-TAPING ST4.2X9.5	2	2	2	2	2	2
92	C11050	THRUST WASHER φ5	1	1	1	1	1	1
93	C20005	NUT-HEX M5	1	1	1	1	1	1
94	Y-12859S	SCREW 1/4-20X1"	12	12	12	12	12	12
95	S15244	ROTISSERIE MOTOR(CE-UK)	-	-	-	-	1	1
	S15245	ROTISSERIE MOTOR(CE-CH)	-	-	1	1	-	-
	S15246	ROTISSERIE MOTOR(CE-EU)	1	1	-	-	-	-
96	57039-901	ROTISSERIE BRACKET	1	1	1	1	1	1
97	S35095	ROTISSERIE SCREW #10-24X0.625	2	2	2	2	2	2
98	S21061	WING NUT #10-24	2	2	2	2	2	2
99	S15763	SPIT ROD (24.8")	1	-	1	-	1	-
	S15256	SPIT ROD (31.0")	-	1	-	1	-	1
100	S15287	ROTISSERIE MEAT FORKS	2	2	2	2	2	2
101	S15299	COUNTER WEIGHT WASHER	1	1	1	1	1	1
102	S15270	ROTISSERIE COUNTER WEIGHT	1	1	1	1	1	1
103	S15761	ROTISSERIE COLLAR-PELLET	1	1	1	1	1	1
104	45303-18A	BRACKET-ROTISSERIE ASSEMBLY-PELLET	1	1	1	1	1	1
105	Y-11698S	SCREW-BUTTERFLY 1/4"-20X0.625"	2	2	2	2	2	2
106	Y-12885S	SCREW 1/4-20x0.375"	4	4	4	4	4	4
107	C11007	SPRING WASHER φ7	4	4	4	4	4	4
108	C05010	SCREW M5X10	8	8	8	8	8	8
109	46440-66	BUSING-PROBE	2	2	2	2	2	2
110	66303-93	BLOCK-MEAT PROBE	2	2	2	2	2	2
111	66303-92	CLIP-POWER CORD-BIG	1	1	1	1	1	1
112	66303-38A	GROUND PLATE-ASSEMBLY(CE)	1	1	1	1	1	1
113	66303-87	SOCKET-POWER CORD(CE)	1	1	1	1	1	1
114	66303-88	CLIP-POWER CORD(CE)	1	1	1	1	1	1
115	C01003	SCREW M3X10	4	4	4	4	4	4
116	Y-29299S	SCREW #10-24X0.625"	4	4	4	4	4	4
117	45303-56	BRACKET-SEAL-HOPPER	1	1	1	1	1	1
118	49440-14	GASKET-AUGER BOX-500	2	-	2	-	2	-
	49550-14	GASKET-AUGER BOX-625	-	2	-	2	-	2
	496051-HP	HARDWARE PACK	1	1	1	1	1	1

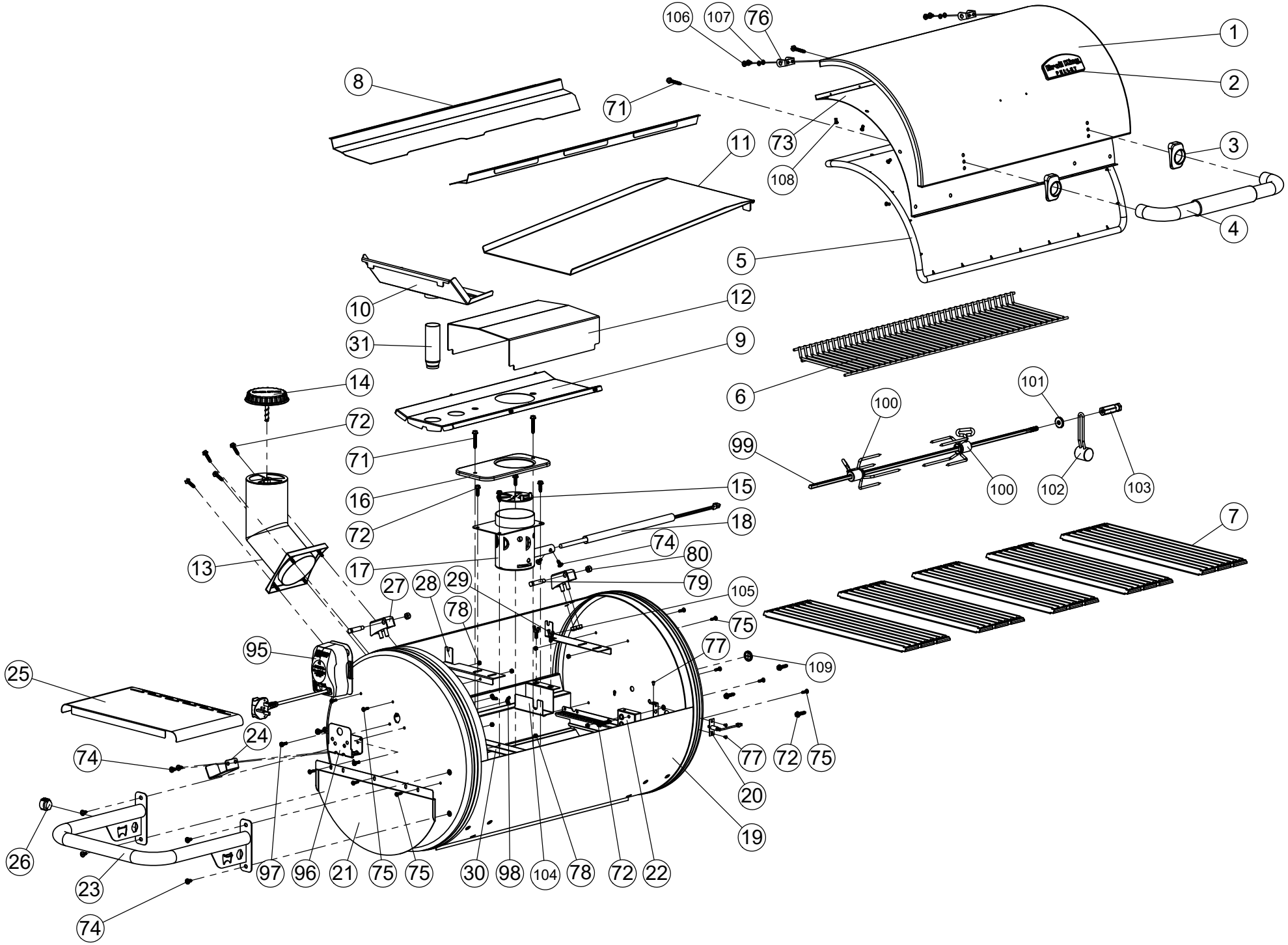
106
107
76
1
2
8
71
73
108
11
3
4
5
10
12
31
9
6
14
72
71
16
72
15
18
13
17
74
80
79
27
28
29
78
105
75
95
77
109
25
24
74
77
72
75
20
19
26
23
74
97
96
21
75
75
30
98
104
78
72
22
101
100
99
100
102
103
7

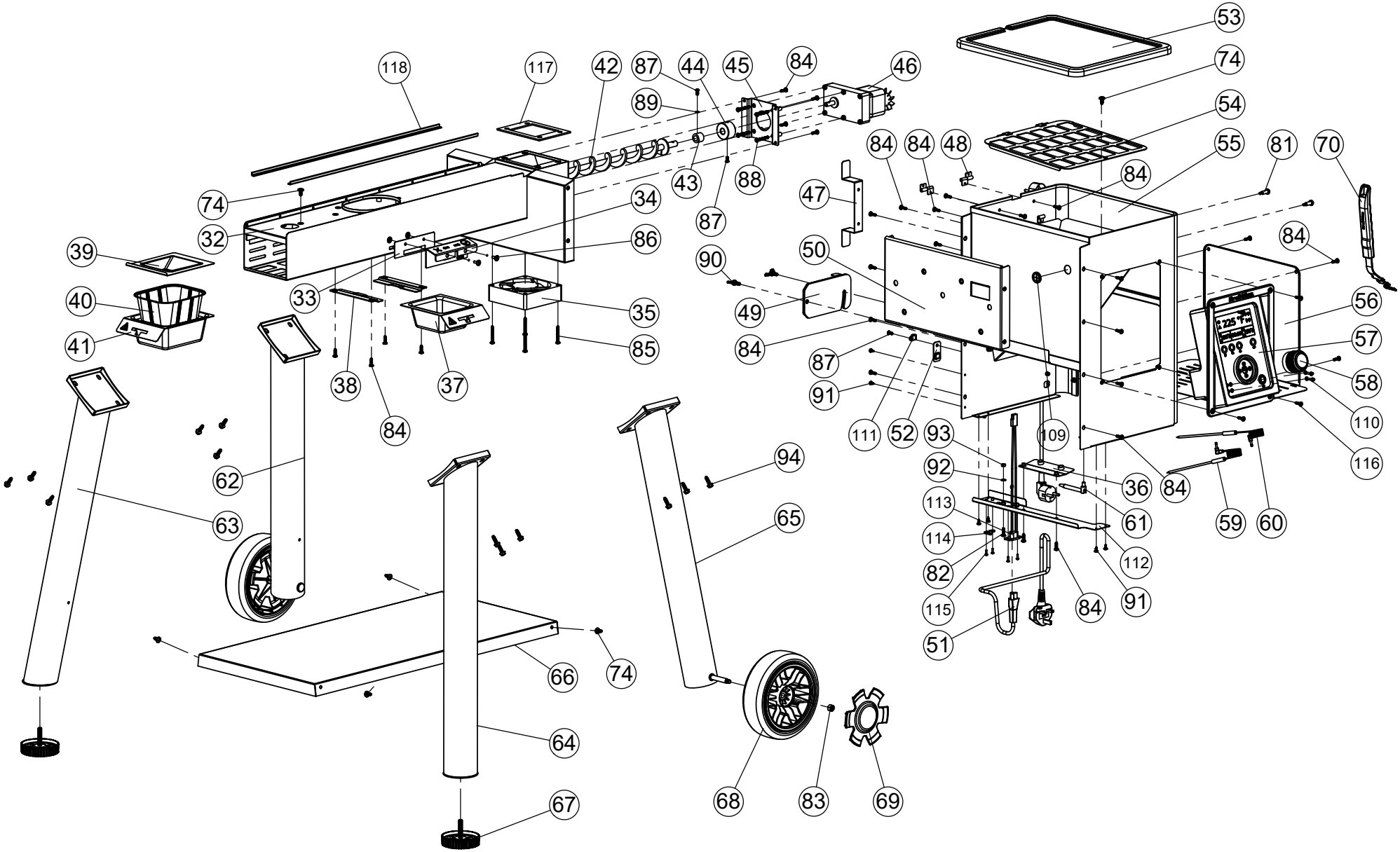
53
74
54
55
81
70
118
117
42
87
44
45
84
46
89
43
88
87
84
84
48
84
47
74
32
34
86
39
33
35
85
40
41
38
37
84
90
50
49
84
87
91
111
52
93
109
56
57
58
110
116
84
36
61
59
60
92
113
114
82
115
51
112
91
84
62
63
94
65
66
74
64
67
68
83
69